Building D Flip Flops

- Combinational Circuit Components
  - Switches
  - Voltage inverters
- D Clocked Latch
  - Feedback to store bits
- D Flip Flop
  - Two D clocked latches

Building D Flip Flops

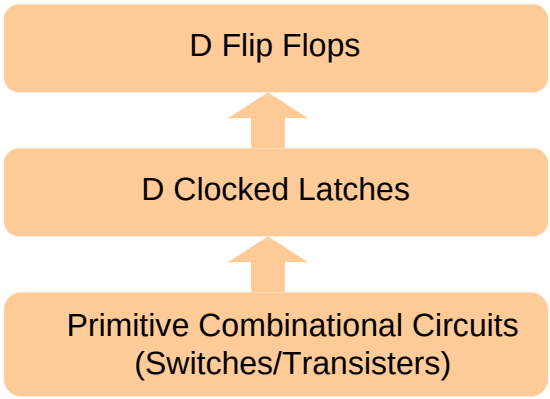

Combinational Circuit Components

Normally Open Switch

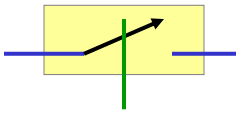

Normally Closed Switch

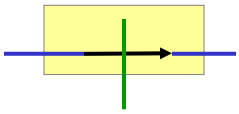

Control = L

open

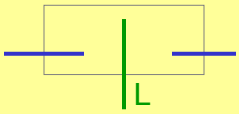

closed

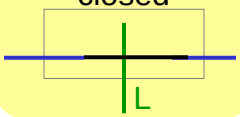

Control = H

closed

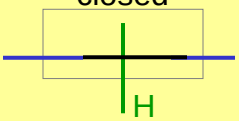

open

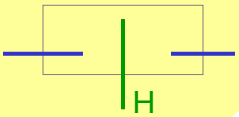

Combinational Circuit Components

Voltage Inverters (2 symbols)

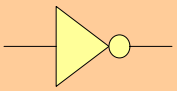

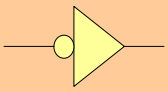

Active Device

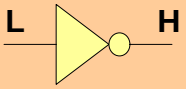

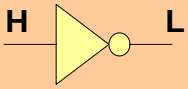

A Simple 1-Bit Memory

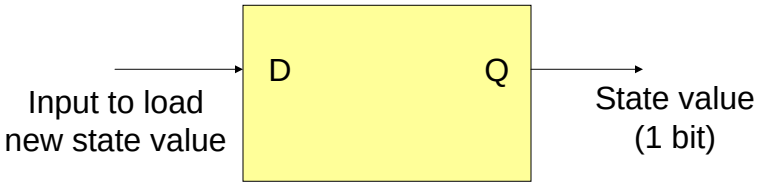

A Simple 1-Bit Memory

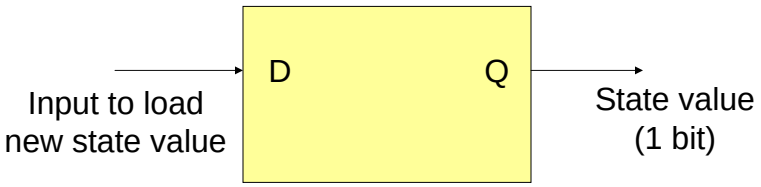

Two configurations:

Hold (store)	= hold onto the state value
Load	= load a new state value

Holding (Storing) With Voltage Inverters

Devices drive each other

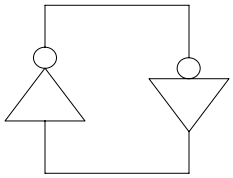

Holding (Storing) With Voltage Inverters

Devices drive each other

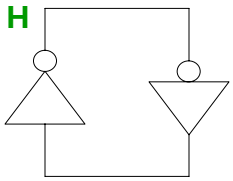

Holding (Storing) With Voltage Inverters

Devices drive each other

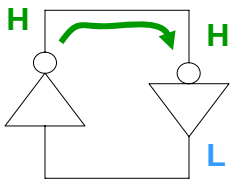

Holding (Storing) With Voltage Inverters

Devices drive each other

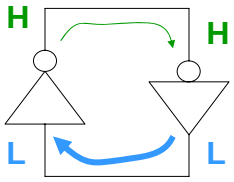

Holding (Storing) With Voltage Inverters

Devices drive each other

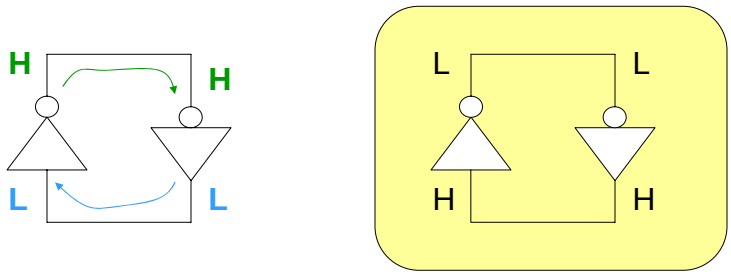

Simple Memory: Two Configurations

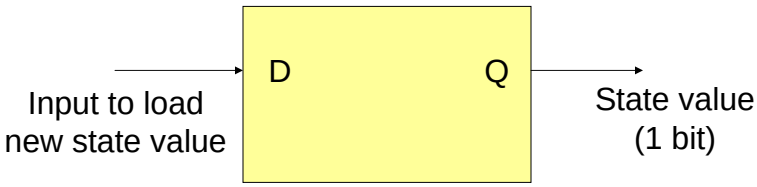

Two configurations:

Hold (store) = hold onto the state value
Load = load a new state value

Simple Memory: Two Configurations

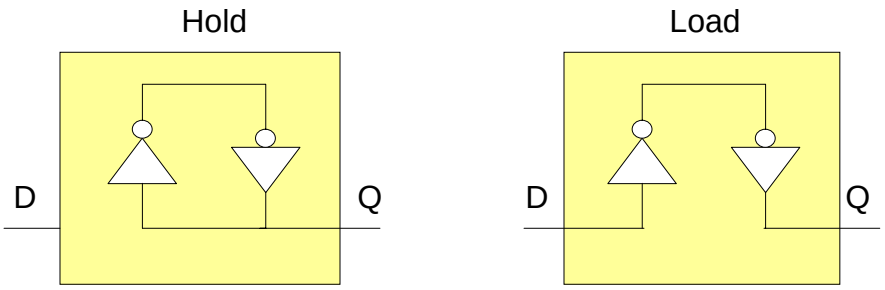

Simple Memory: Two Configurations

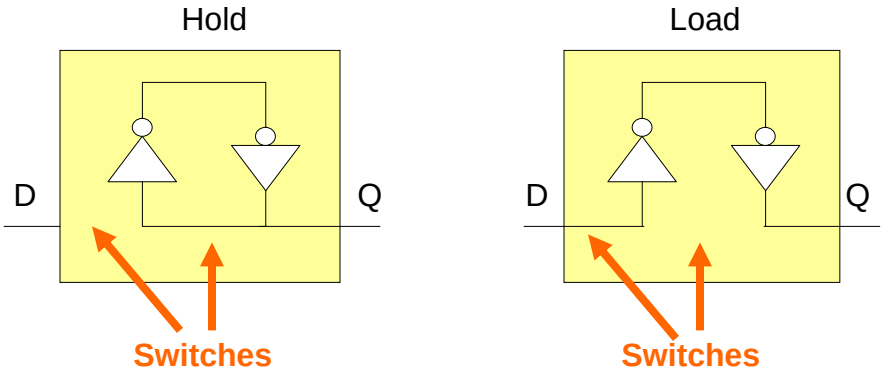

D Clocked Latch

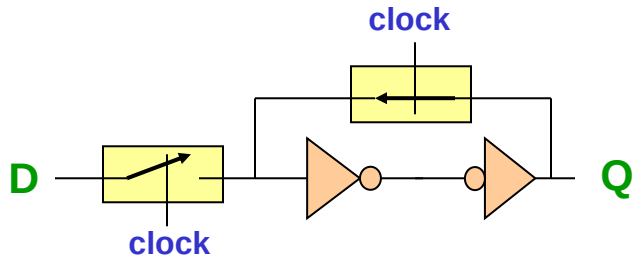

clock = L : Hold

clock = H : Load

D Clocked Latch

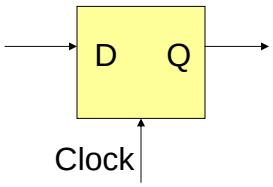

It similar to a D flip flop but it reacts to the clock differently

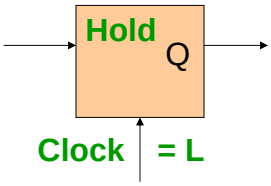

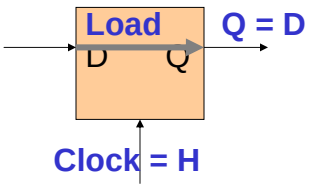

It's "transparent"

Comparing Flip Flop and Latch

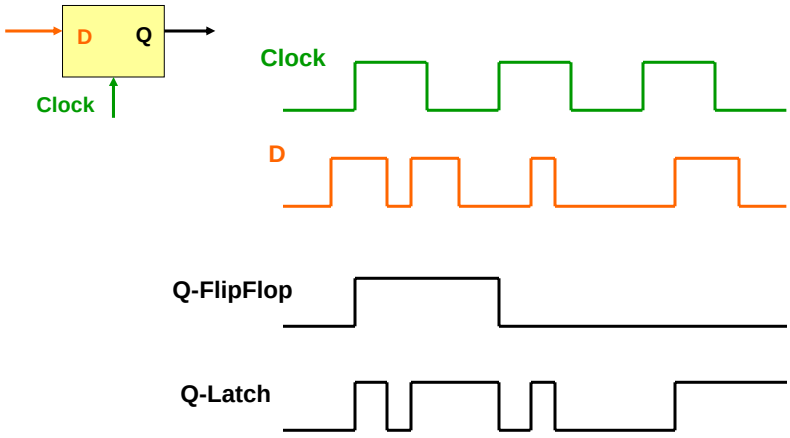

Comparing Flip Flop and Latch

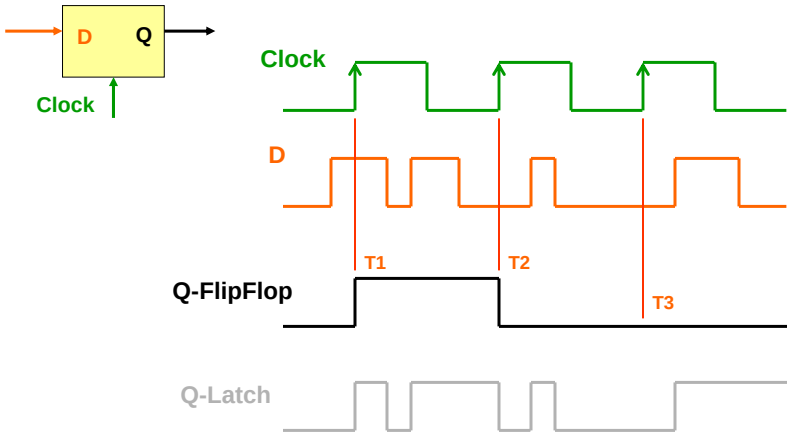

Comparing Flip Flop and Latch

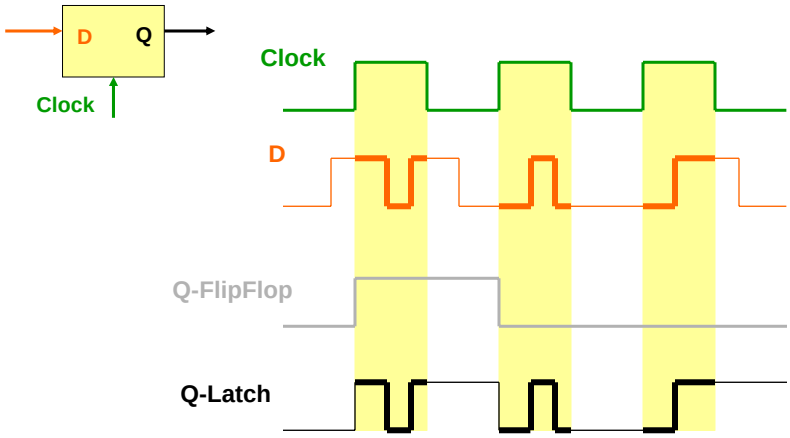

Comparing Flip Flop and Latch

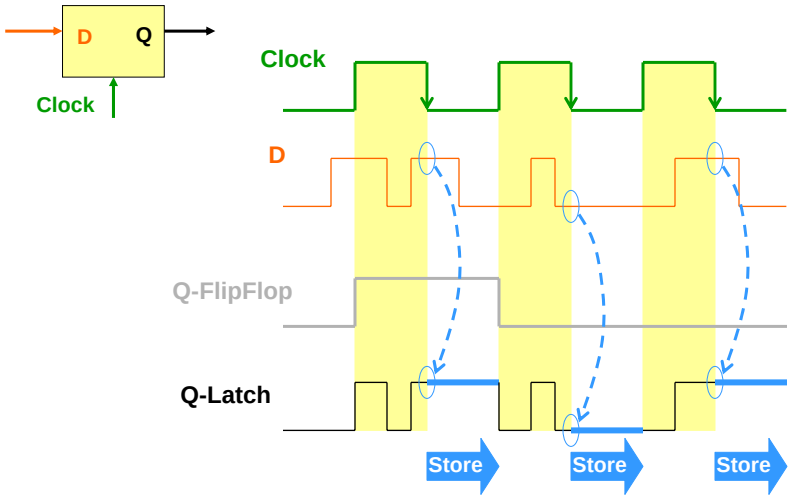

D Flip Flop vs. D Clocked Latch

- D flip flop
  - Triggered on positive edge of clock
  - Output Q (and state) changes only at a *time instant*
- D clocked latch
  - Output Q changes (with D) while clock is H
  - Output Q changes during a *window of time*
  - Trickier to use since lots of changes can happen during a time duration
    - Flip flops are preferred to latches in designing circuits
    - Latches are used in memory circuits, e.g., RAM

D Flip Flop

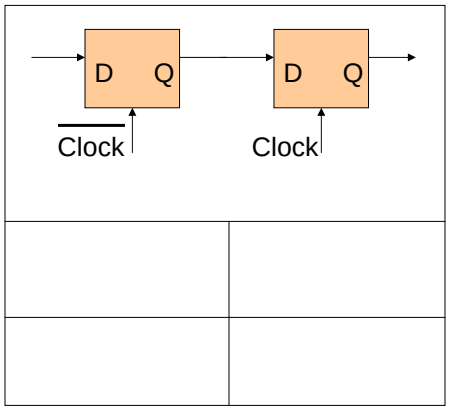

D Flip Flop

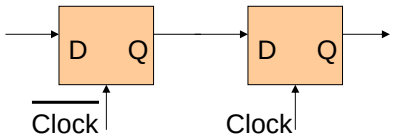

Clock = L	Load D → Q	Hold

D Flip Flop

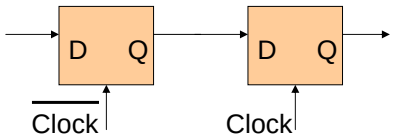

Clock = L	Load D → Q	Hold
Clock = H	Hold	Load D → Q

D Flip Flop

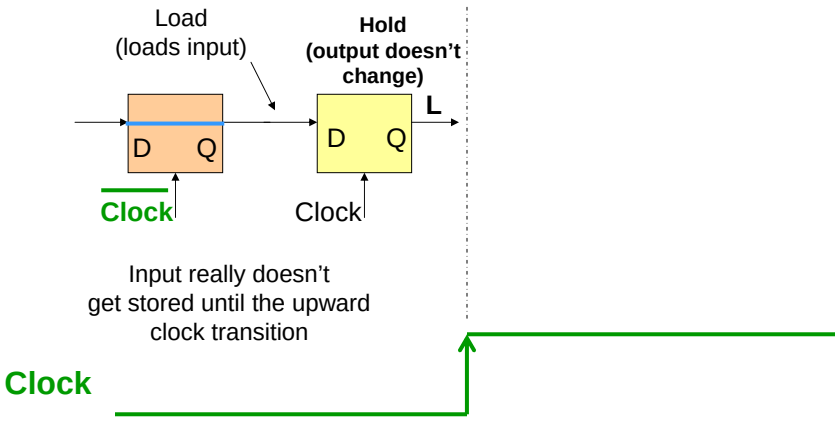

D Flip Flop

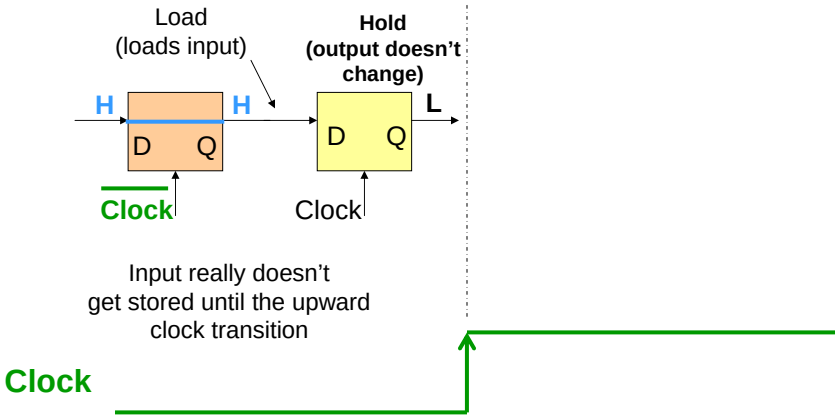

D Flip Flop

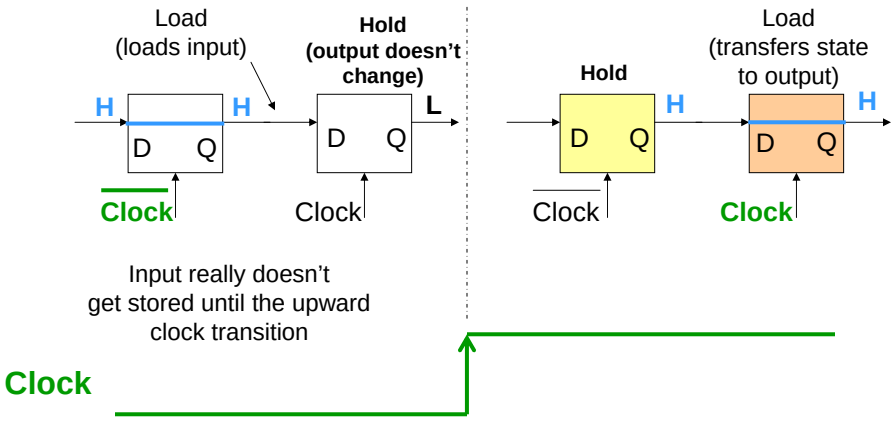

Summary

- Combinational circuit components
  - switches and voltage inverters
- D clocked latch
  - Built from switches and voltage inverters
  - 2 configurations: load and hold
- D flip flop
  - Built from two D latches in series